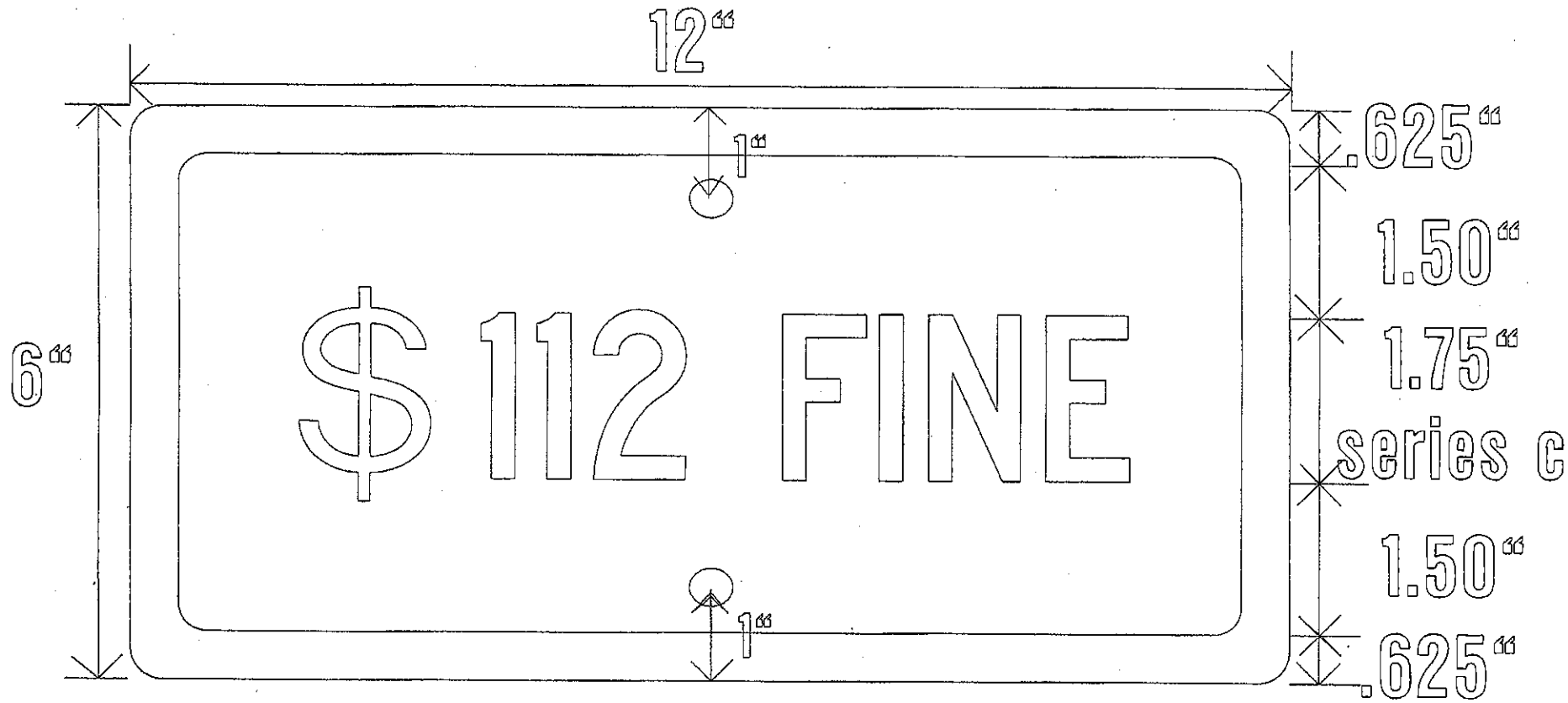

R7-8FINE