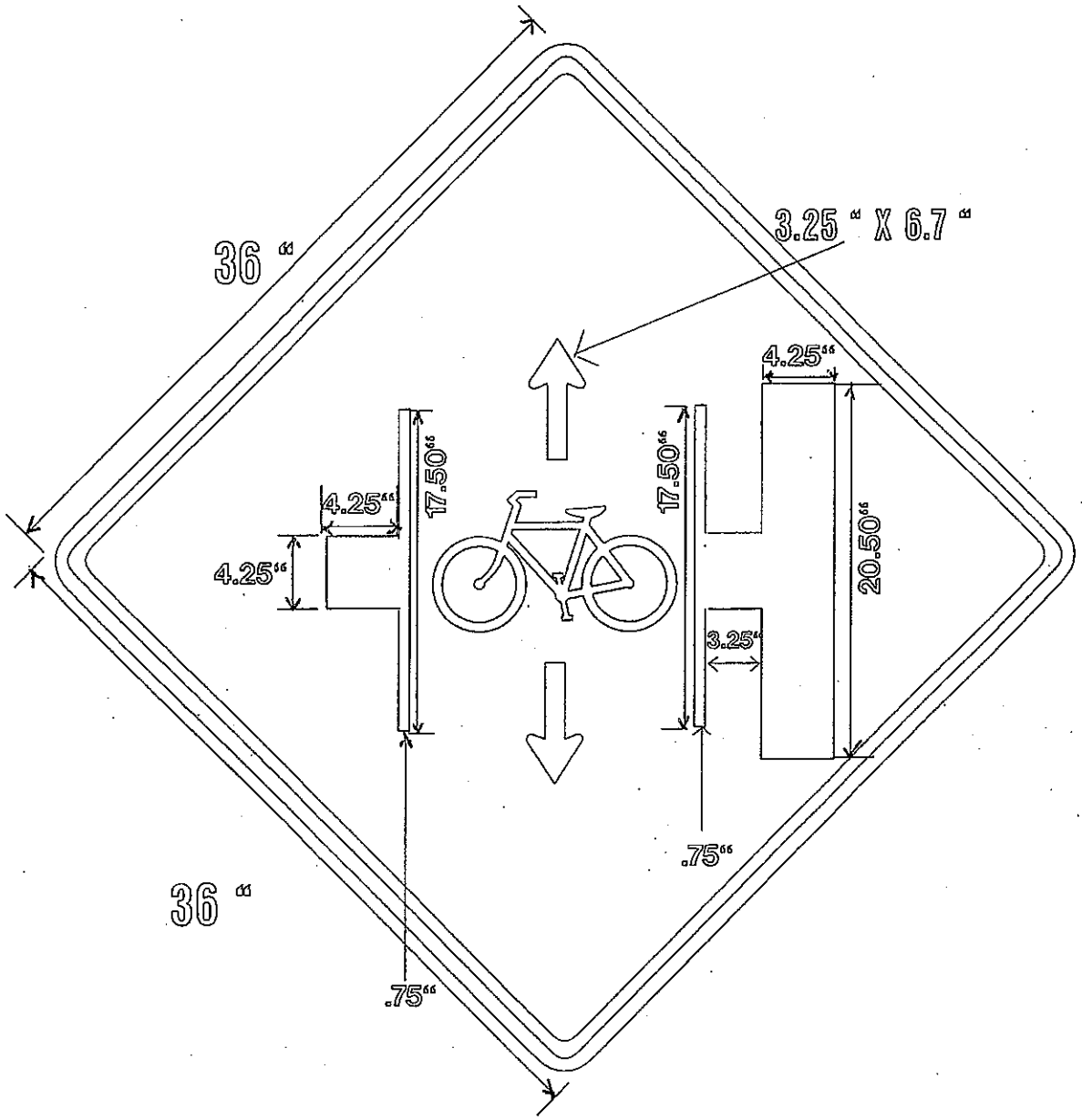

FLUORESCENT YELLOW GREEN VIP SHEETING
WITH BLACK COPY AND BORDER.
FYG BORDER IS .625 " BLACK INSET BORDER IS .875 "
BIKE IS 11.6 " X 6.5 "

W2-2 Bike Left 36