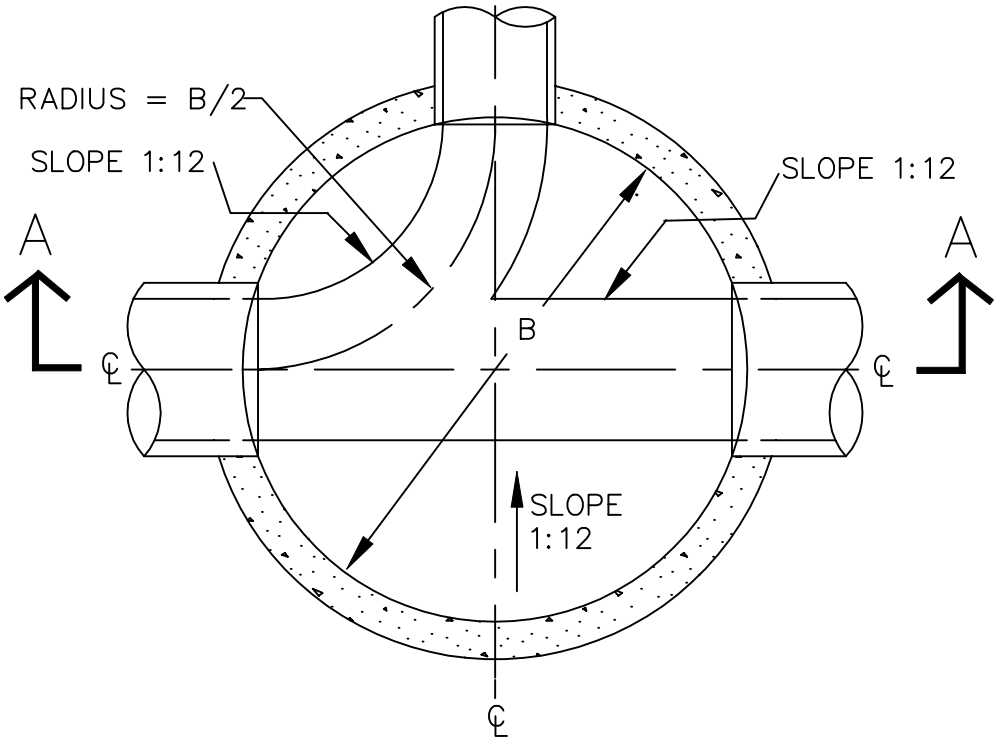

PLAN

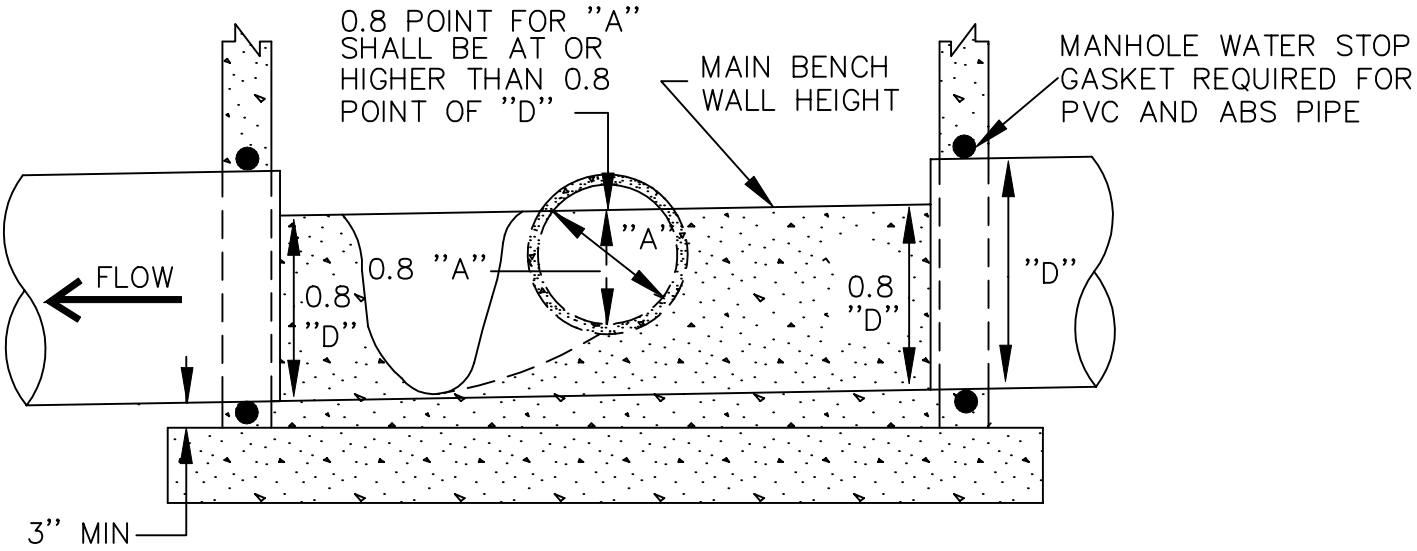

SECTION A–A

DRAWN BY: JSH CHECKED BY: RJH APPROVED BY: DIRECTOR OF PUBLIC WORKS	CITY OF BOULDER, COLORADO MANHOLE INVERT	ISSUED: JULY 2, 1998 REVISED: OCT. 17, 2000 DRAWING NO. 6.03