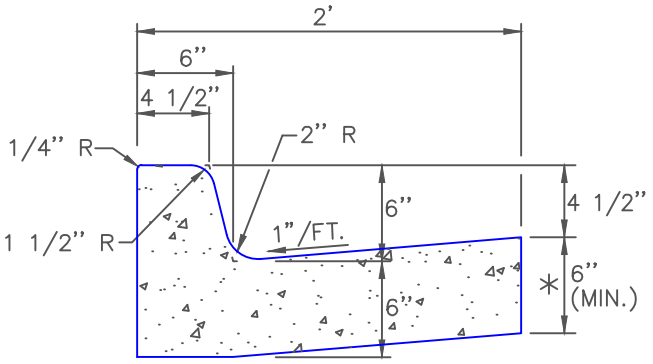


STANDARD 6"

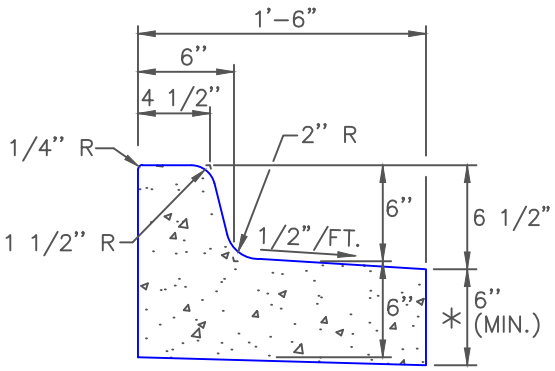


OUTFALL/MEDIAN

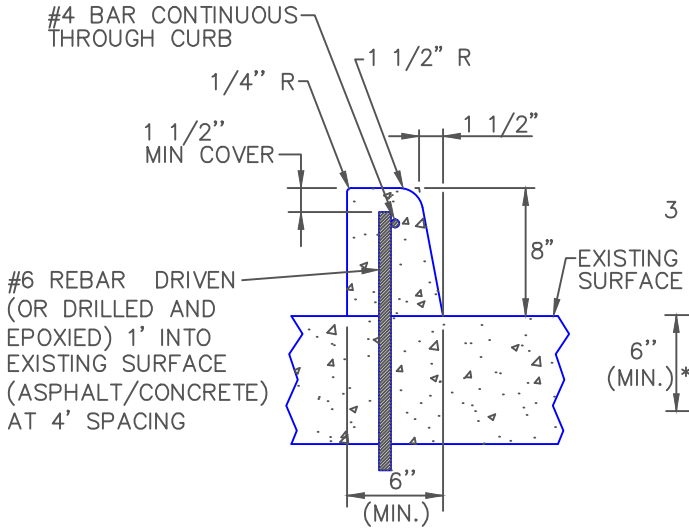


DOWELLED BARRIER CURB

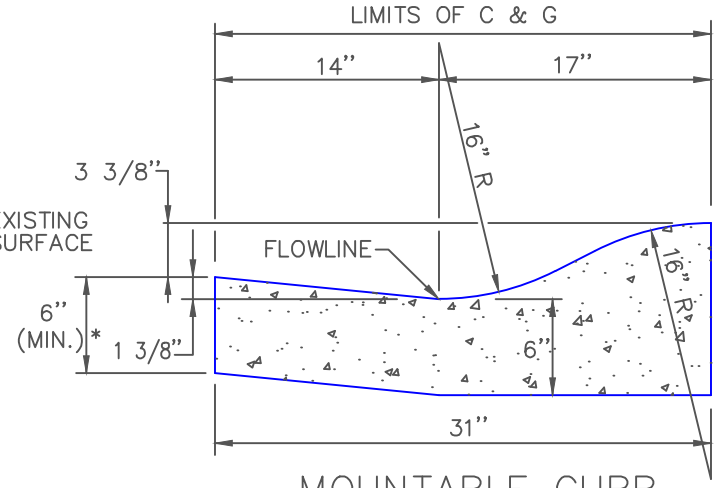


MOUNTABLE CURB

(NOTE: FOR USE ONLY IN DETACHED SINGLE-FAMILY RESIDENTIAL STREETS)

NOTES:

1. ALL EXPOSED CONCRETE SHALL HAVE A BROOM FINISH.
2. EXPANSION JOINTS SHALL BE INSTALLED AT 500 FOOT MAXIMUM INTERVALS SEE EXPANSION JOINT DETAIL.
3. CONTRACTION JOINTS SHALL BE INSTALLED AT END OF CURB RETURNS AND AT 10 FOOT MAXIMUM INTERVALS – SEE CURB CONTRACTION JOINT DETAIL.
4. WHEN JOINING EXISTING CURB, PROVIDE A MINIMUM OF THREE #4 x 18" DOWELS (9" EMBEDMENT) EVENLY SPACED.

* 5. WHEN PLACING CURB ADJACENT TO CONCRETE PAVEMENT, THICKEN GUTTER TO MATCH PAVEMENT DEPTH.

| | | |
|---|---|---|
| DRAWN BY: JSH<br>CHECKED BY: RJH<br><br>APPROVED BY:<br>DIRECTOR OF PUBLIC WORKS | CITY OF BOULDER, COLORADO<br><br>CURB AND GUTTER | ISSUED: JULY 2, 1998<br>REVISED: OCT 6, 2009<br><br>DRAWING NO.<br>2.01.A |